NAIL SPOTTER

*Specify 2 or 3 Inch Widths When Ordering

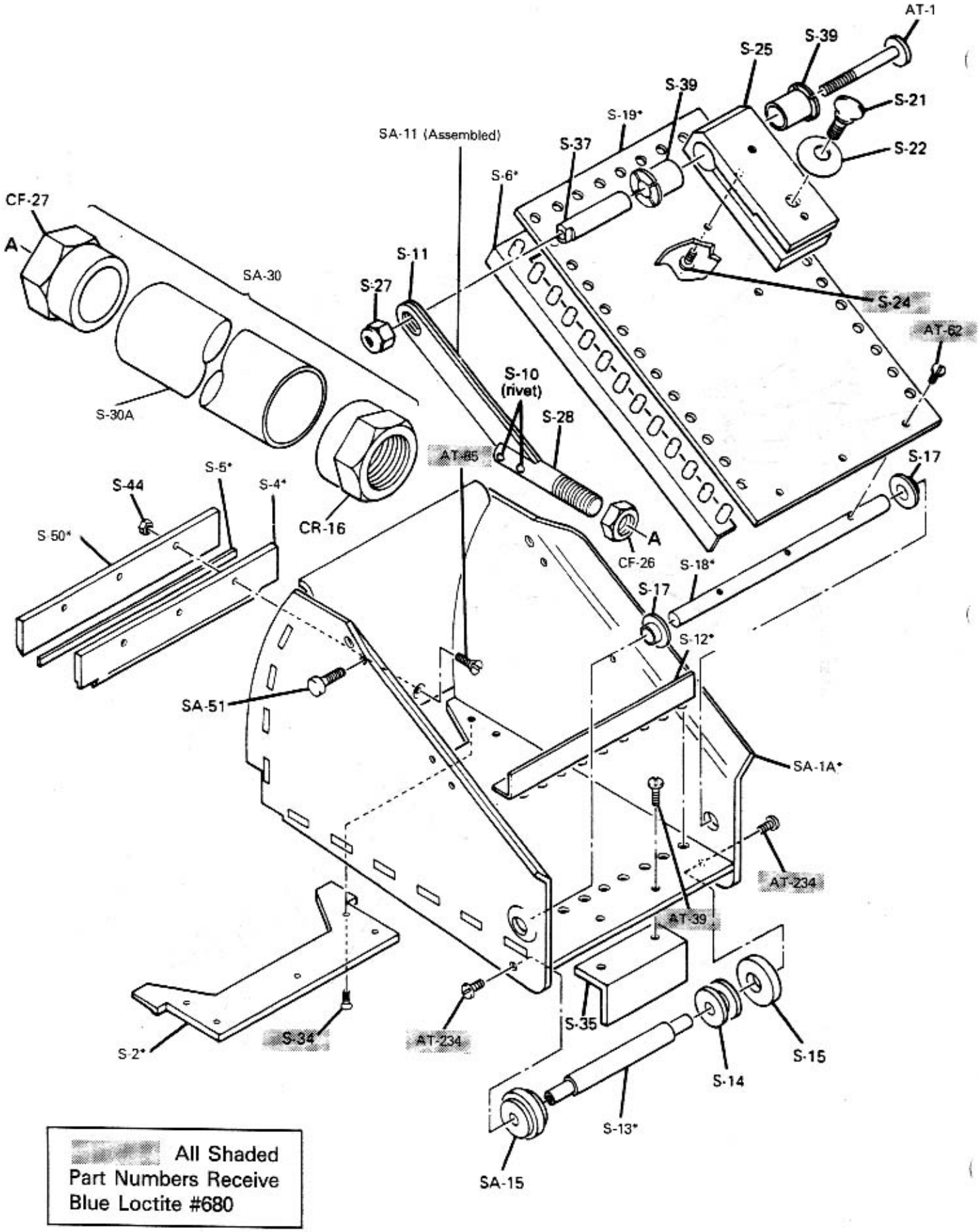

All Shaded Part Numbers Receive Blue Loctite #680

Effective and Revised August 1, 1995