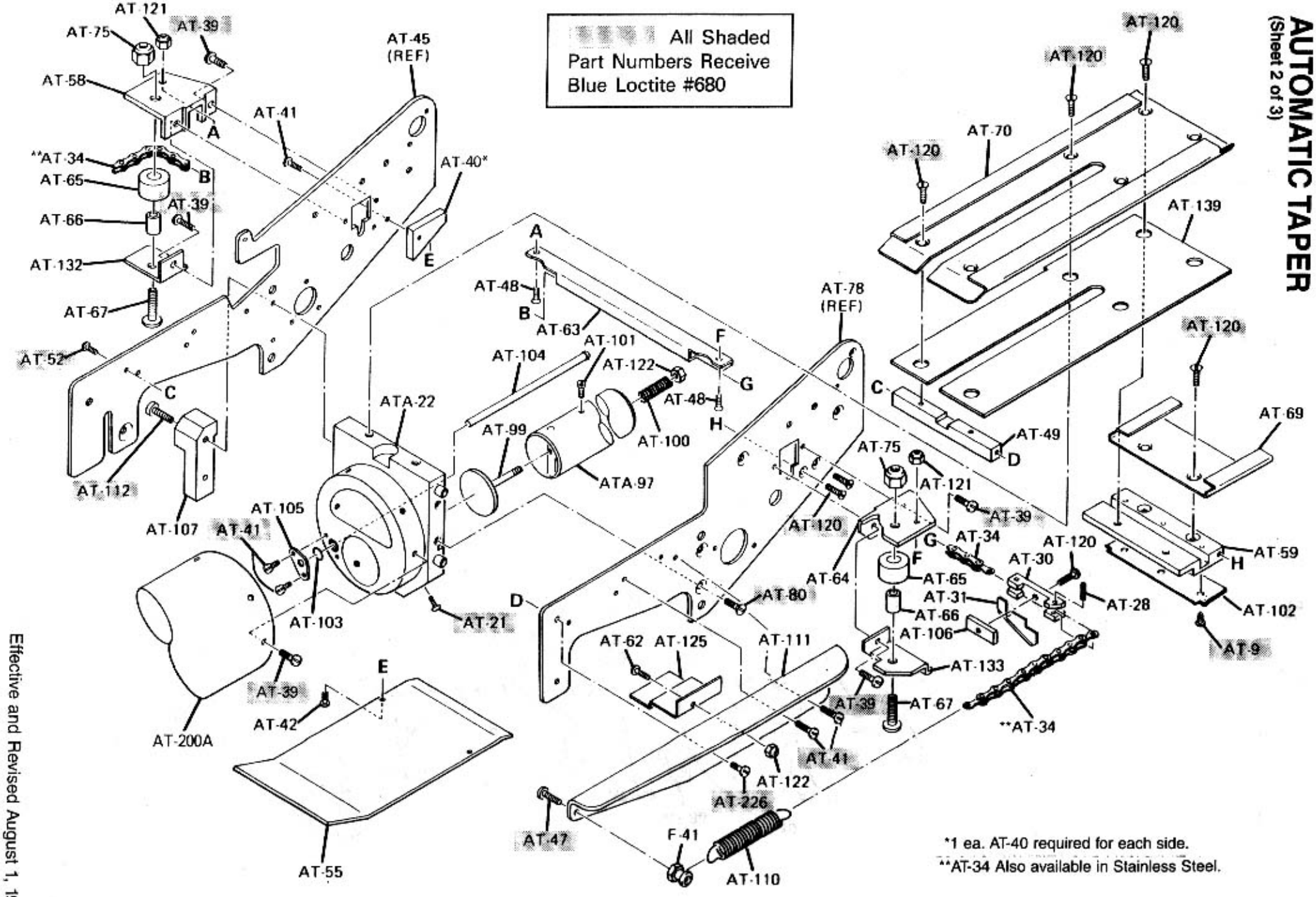AUTOMATIC TAPER
(Sheet 2 of 3)